Diritti riservati All rights reserved

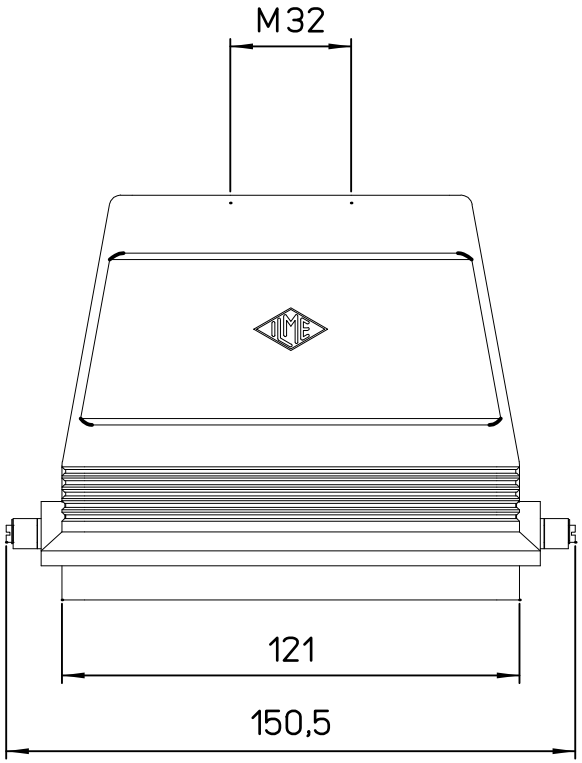

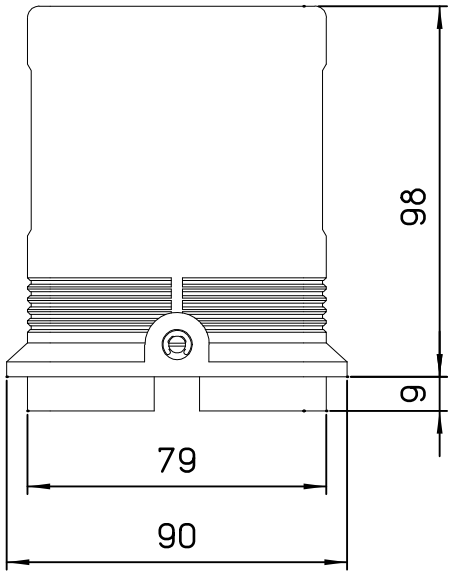

dimensions in mm	MFV 48 L32	Scale
Date 14/12/06	hood top entry M32 no adapt.	1:2
Sign.		